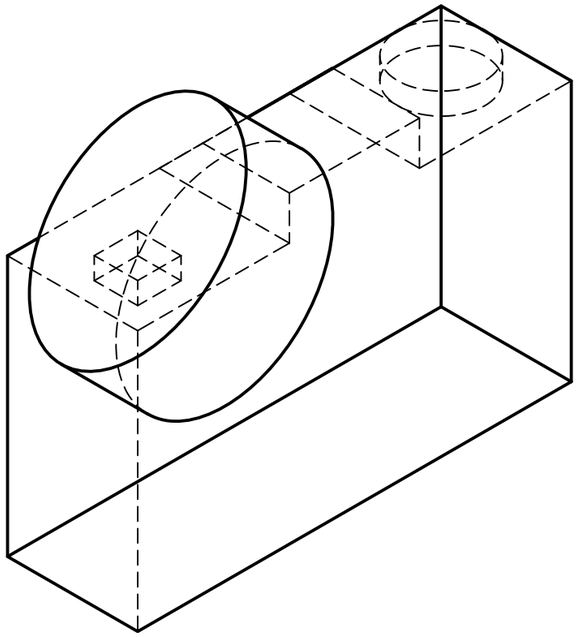

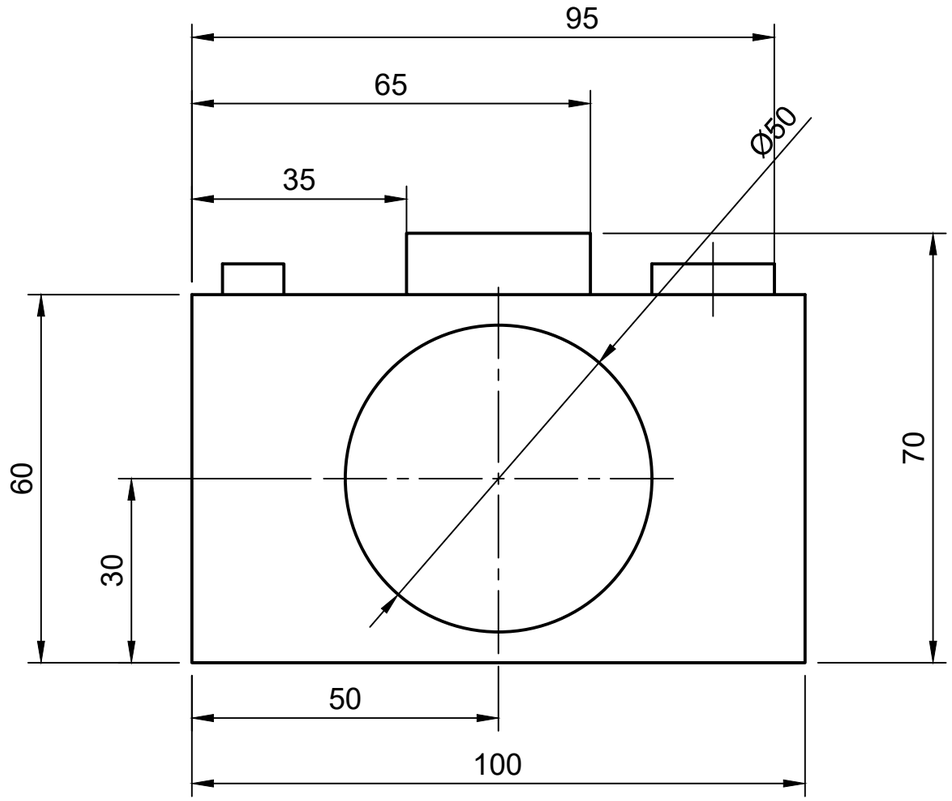

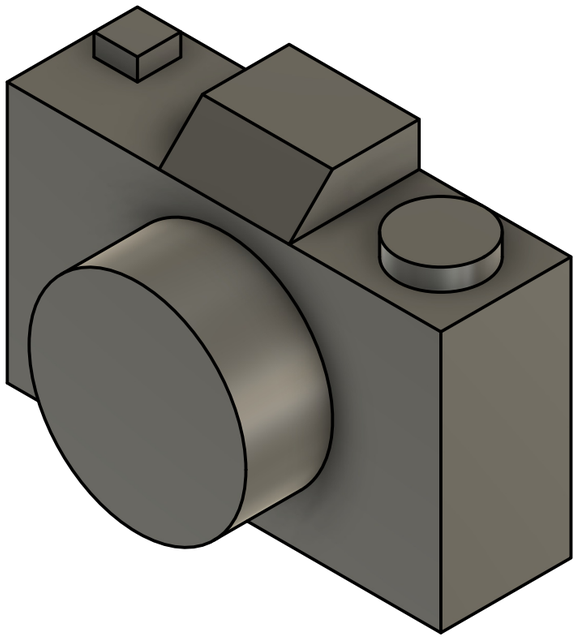

Dept.	Technical reference	Created by	Approved by
AIDS	25014014	IYYAPPAN S 10-03-2026	
		Document type	Document status
		Title 250141014-2.1	DWG No.
			Rev. / Date of issue: 10-03-2026 / Sheet: 1/1